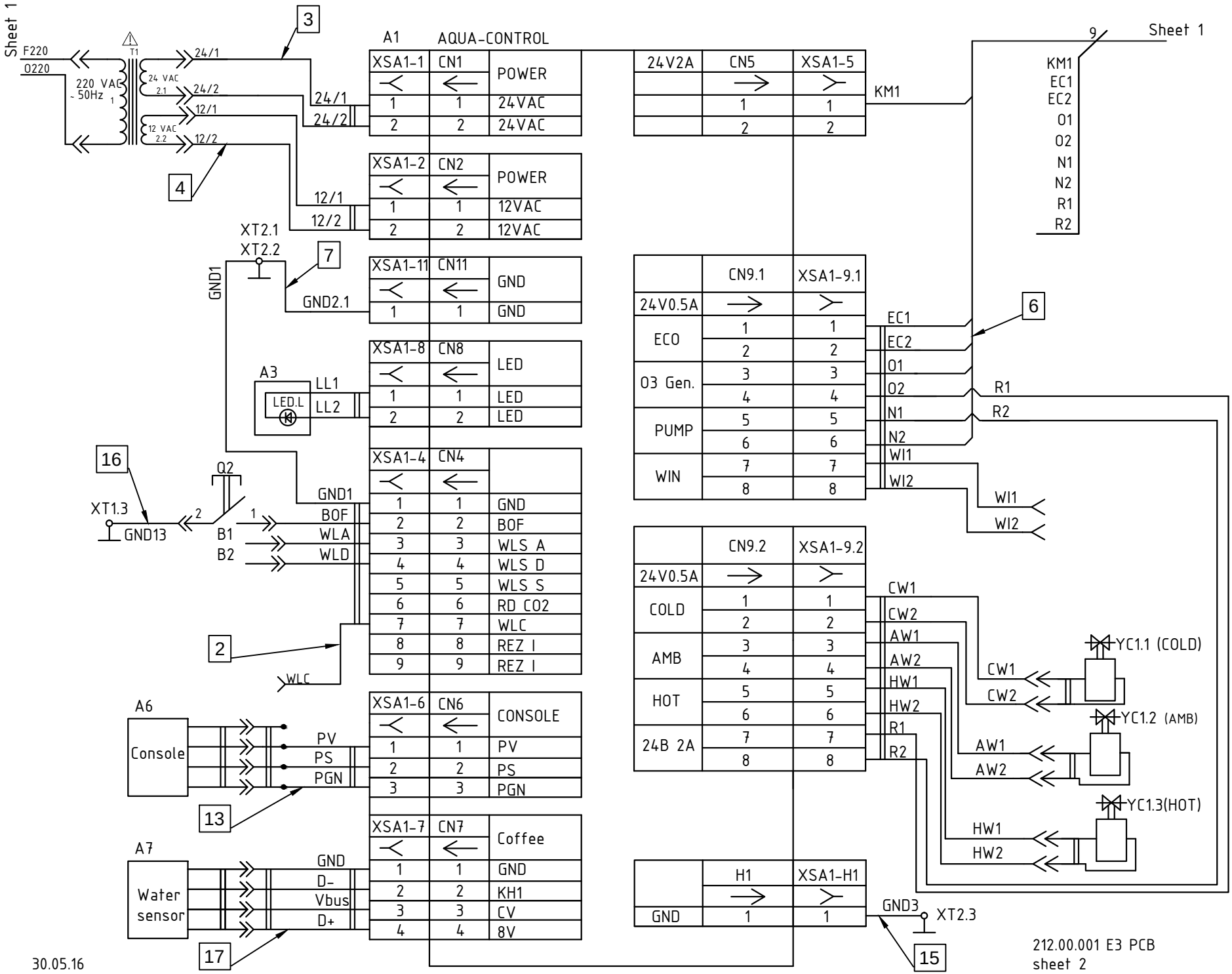
Sheet 1
F220
O220
T1
220 VAC ~ 50Hz
24 VAC 2.1
12 VAC 2.2
24/1
24/2
12/1
12/2
3
4
A1
AQUA-CONTROL
XSA1-1
CN1
POWER
1 1 24VAC
2 2 24VAC
XSA1-2
CN2
POWER
1 1 12VAC
2 2 12VAC
XT2.1
XT2.2
7
GND1
GND2.1
XSA1-11
CN11
GND
1 1 GND
A3
LED.L
LL1
LL2
XSA1-8
CN8
LED
1 1 LED
2 2 LED
16
Q2
XT1.3
GND13
B1
B2
XSA1-4
CN4
GND1
1 1 GND
2 2 BOF
3 3 WLS A
4 4 WLS D
5 5 WLS S
6 6 RD CO2
7 7 WLC
8 8 REZ I
9 9 REZ I
2
WLC
A6
Console
PV
PS
PGN
13
XSA1-6
CN6
CONSOLE
1 1 PV
2 2 PS
3 3 PGN
A7
Water sensor
GND
D-
Vbus
D+
17
XSA1-7
CN7
Coffee
1 1 GND
2 2 KH1
3 3 CV
4 4 8V
24V2A
CN5
XSA1-5
1 1
2 2
KM1
9
Sheet 1
KM1
EC1
EC2
O1
O2
N1
N2
R1
R2
CN9.1
XSA1-9.1
24V0.5A
ECO
O3 Gen.
PUMP
WIN
1 1
2 2
3 3
4 4
5 5
6 6
7 7
8 8
EC1
EC2
O1
O2
N1
N2
WI1
WI2
6
R1
R2
WI1
WI2
CN9.2
XSA1-9.2
24V0.5A
COLD
AMB
HOT
24B 2A
1 1
2 2
3 3
4 4
5 5
6 6
7 7
8 8
CW1
CW2
AW1
AW2
HW1
HW2
R1
R2
YC1.1 (COLD)
YC1.2 (AMB)
YC1.3(HOT)
CW1
CW2
AW1
AW2
HW1
HW2
H1
XSA1-H1
GND
1 1
GND3
XT2.3
15
30.05.16
212.00.001 E3 PCB
sheet 2